IGB–100S

PAGE 1

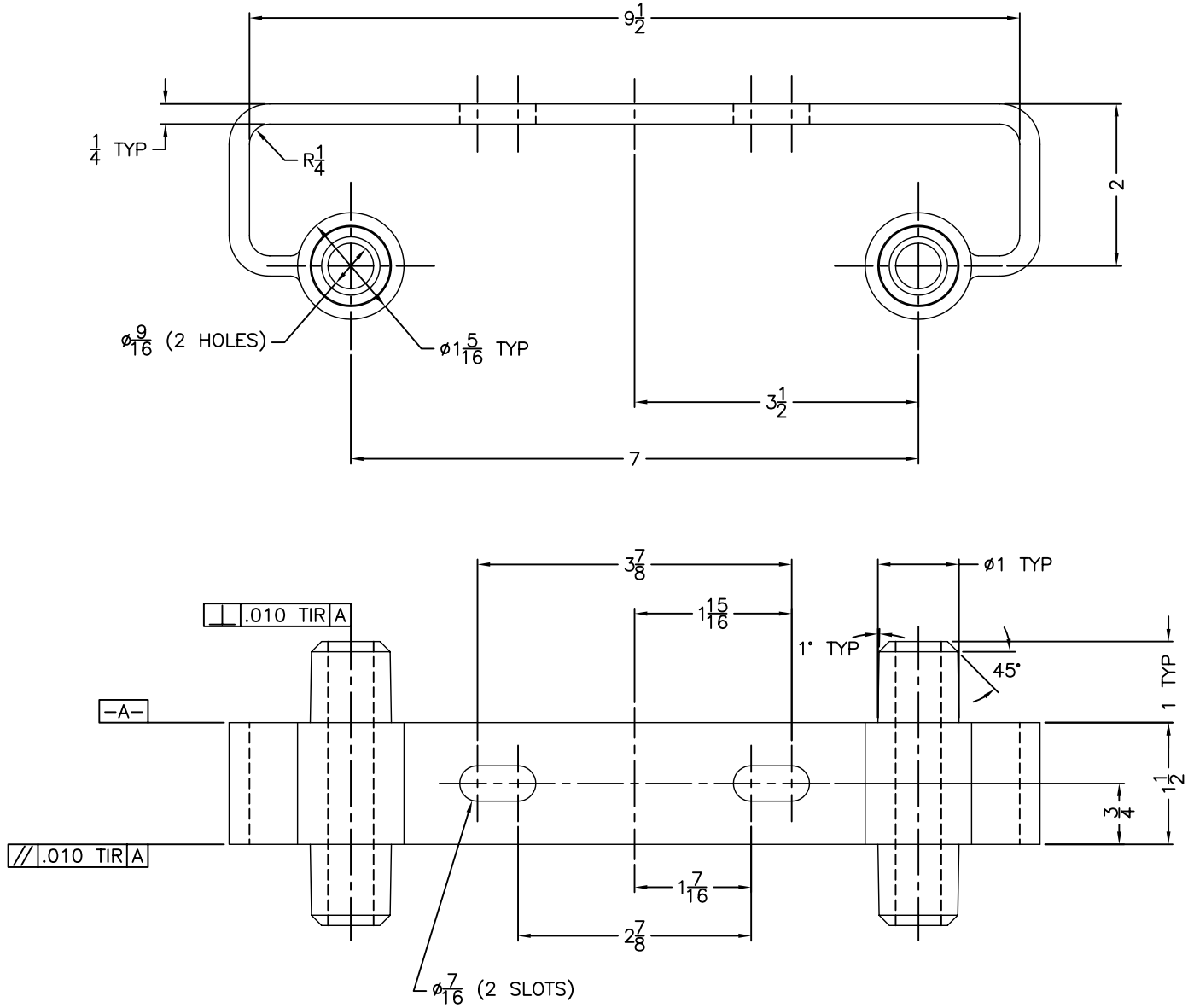

NOTE: SURFACE OF PART MUST BE FREE OF POROSITY.
PART MUST BE FREE OF DISTORTION DUE TO CASTING PROCESS.

ALL INFORMATION CONTAINED IN THIS DRAWING IS CONFIDENTIAL AND PROPRIETARY TO CONERY MANUFACTURING, INC.

CONERY MFG INC

CHANGES	TOLERANCES	DRAWN BY	DATE
F	DECIMALS .XXX = ±.005 .XX = ±.010 FRACTIONAL X/X = ±.1/64 ANGLES X° = ±1/2°	D. MIDDLETON	08/25/04
E		MATERIAL SPECIFICATION: 304 SERIES STAINLESS STEEL	
D			
C			
B			
A			

INTERMEDIATE GUIDE BRACKET 1" RAILS

SCALE: FULL

PART NO. IGB–100S